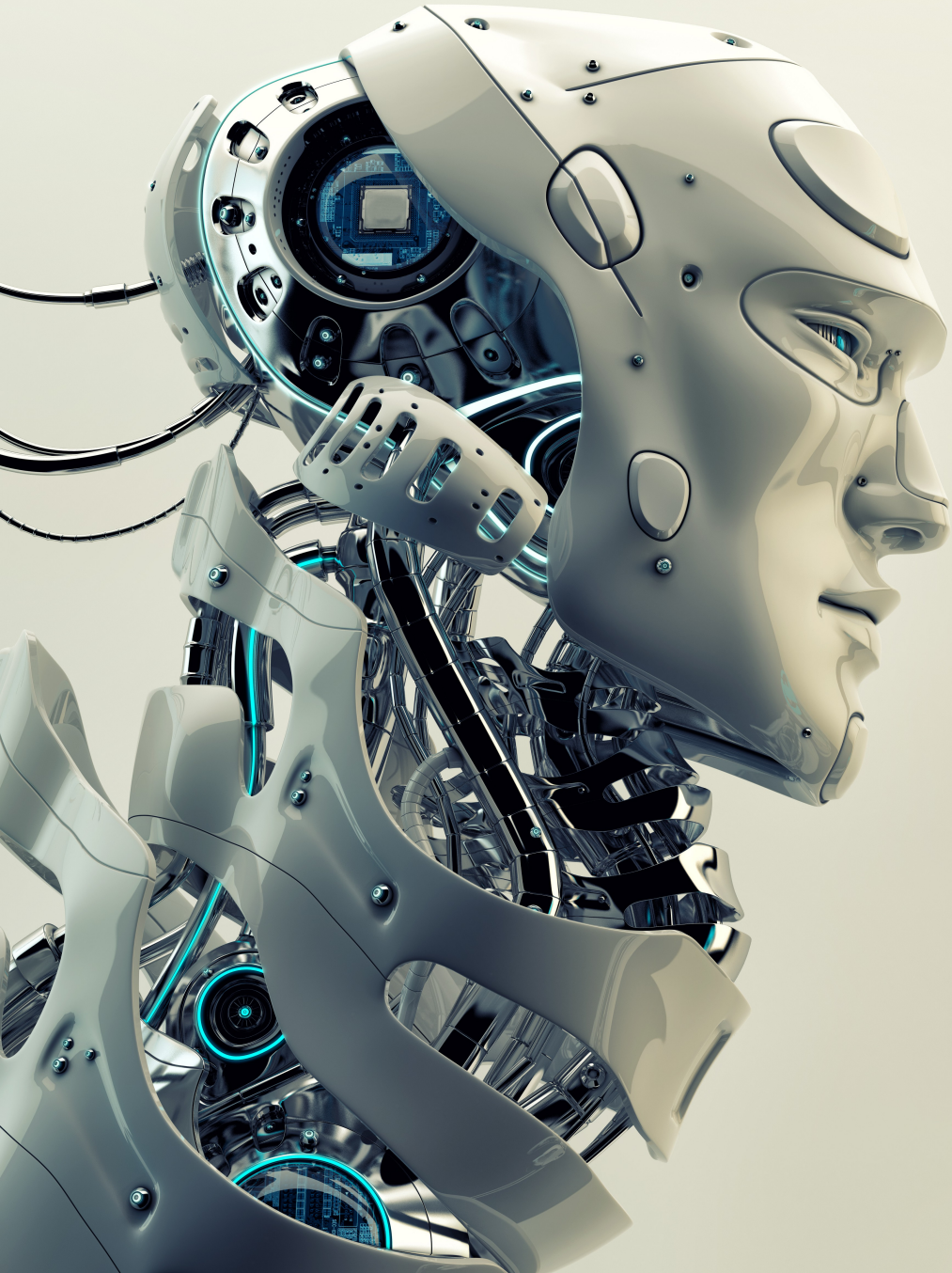

Encoders

for Robotic Systems, Motors & OEM Applications

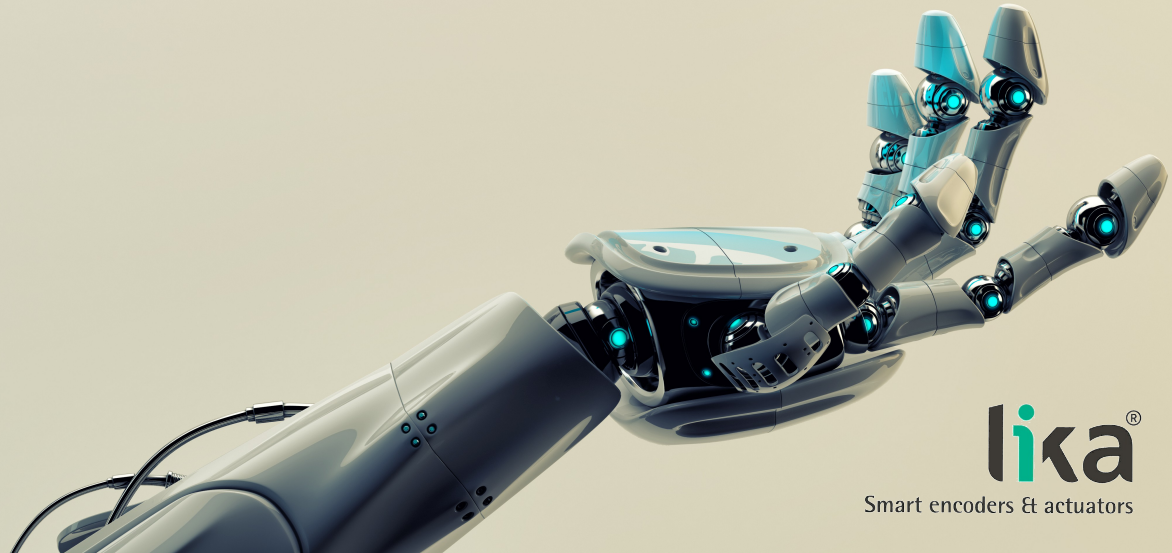

lika®
Smart encoders & actuators

ENCODERS for Robotic Systems, Motors & OEM Applications

Lika Electronic designs and manufactures a comprehensive selection of **standard and frameless high-resolution encoders** to suit the **accurate position and speed feedback requirements** of multi-axis robots, cobots, motors, direct drives, military installations, commercial and defence radars and antennas, automated surveillance systems, advanced industrial machinery and a variety of resolution, accuracy and space critical applications.

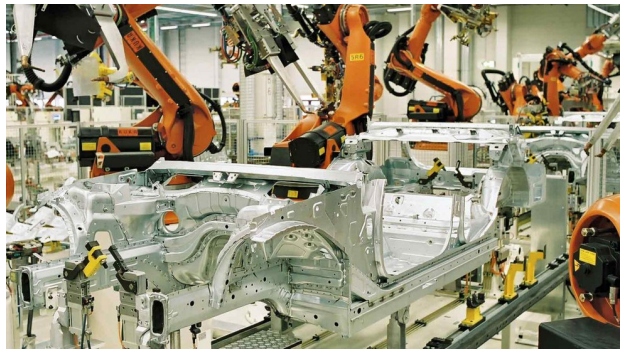

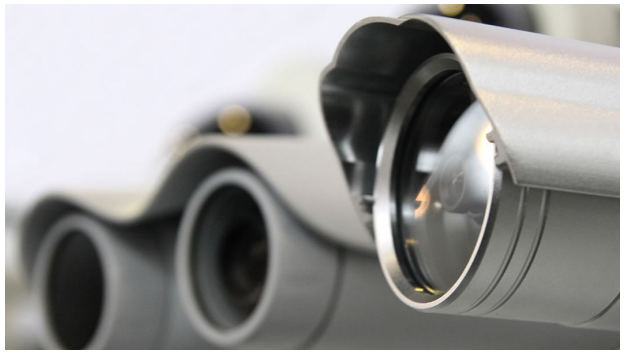

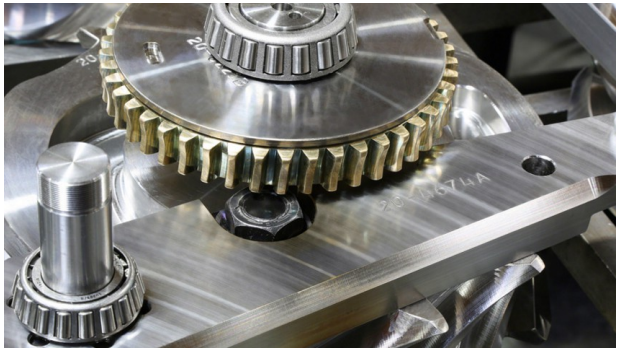

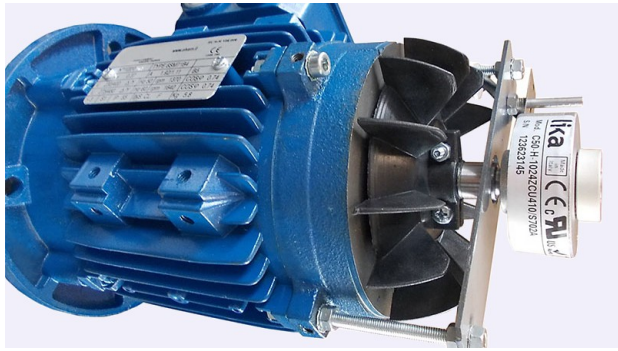

Smart encoders & actuators

ENCODERS for Robotic Systems, Motors & OEM Applications

Among the latest innovations:

AMM8A **ASM36** **SMAB** **ASC85**

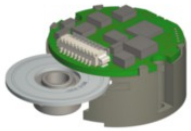

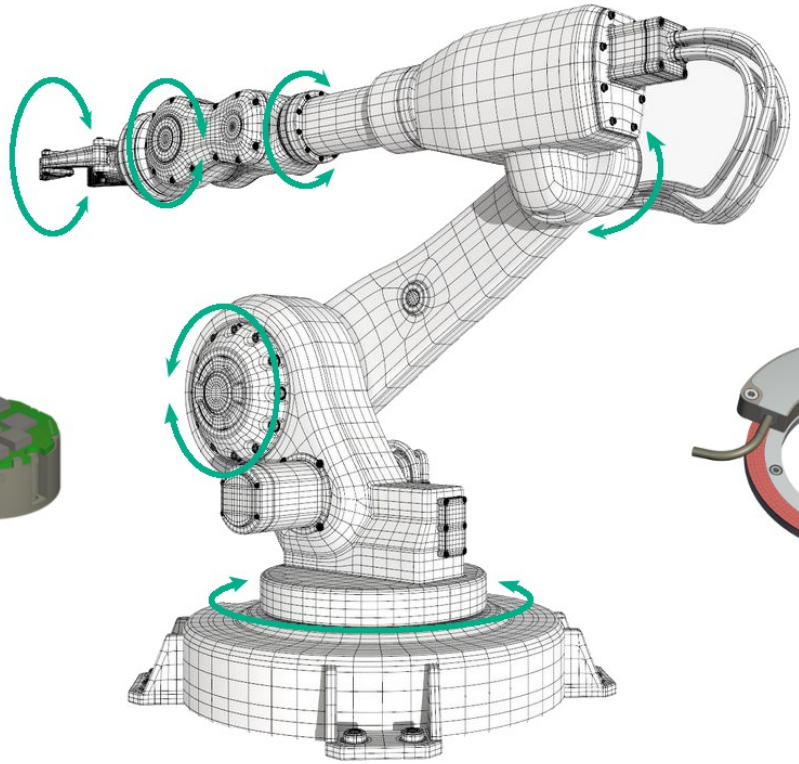

lika®
Smart encoders & actuators

AMM8A

AMM8A is the optical multiturn encoder in a small modular design

Frameless encoder with optical sensing technology and minimum footprint

For feedback of robotic systems, motors and OEM applications

SSI and BiSS C-mode interfaces

Multiturn resolution up to 20 x 14 bits

Sine-Cosine additional track

AMM8A

- Frameless and bearingless design
- unaffected by wear, friction, fatigue and mechanical stresses
- Ø 96 mm / 3.779"
- only 28 mm / 1.102" thickness, Ø 25 mm / 0.984" thru-bore shaft
- direct integration into motors and OEM applications
- operating temperature -40°C +100°C / -40°F +212°F
- simple installation procedure, via tool and software (see kit **IF90-SC**)

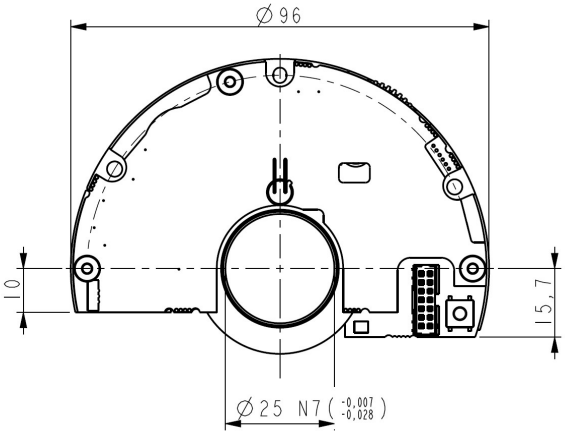

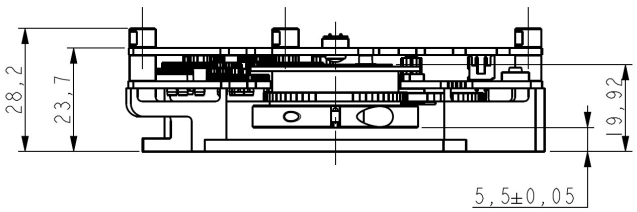

AMM8A

- Calibration software **SW IF90-SC_vx.x.exe**
- connection via hardware interface **IF90-SC**, USB cable and **EC-FCI-LK-TF12-0,5** or **EXC-D15M-S71-A16-1,0-FCI-S71** cables

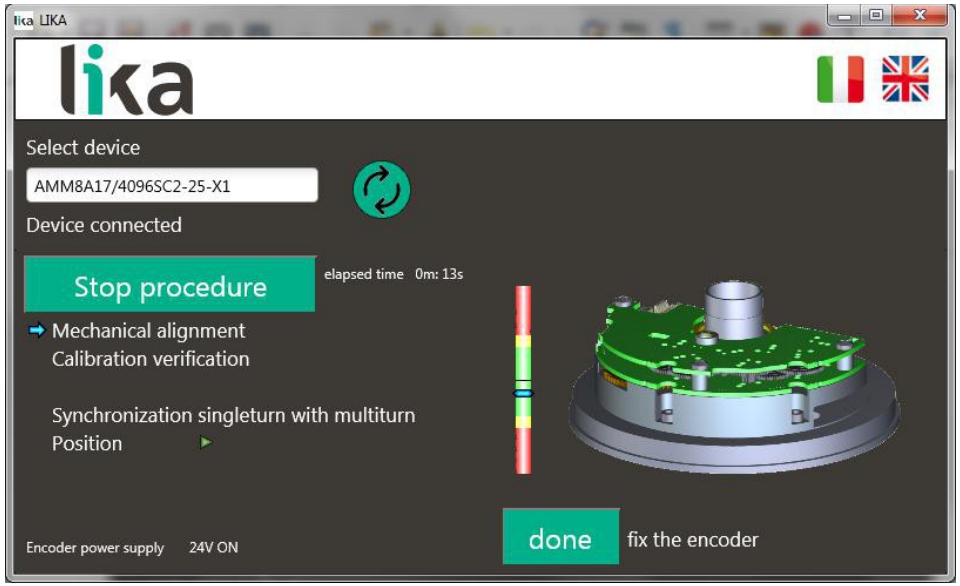

EC-FCI-LK-TF12-0,5 and EXC-D15M-S71-A16-1,0-FCI-S71 cables, PF5013 mechanical spacer and PF5015 positioning tool to be ordered separately.

AMM8A

	AMM8Axx/xxxxxBG1-..., BG2-..., GG1-..., GG2-...	AMM8Axx/xxxxxSC1-..., SC2-...
Interface	SSI interface MSB Aligned protocol Binary or Gray code	BiSS C-mode interface
Resolution	AMM8A16/4096... = 28 bits ... AMM8A20/16384... = 34 bits	
Output	14 pin PCB connector (mating connector + cordset on demand)	
Power supply	+5Vdc ±5%, +10Vdc +30Vdc	
Further features	Tp pause time: 12 µs Clock frequency max.: 2 MHz Zero setting and Counting direction inputs Sine-Cosine additional signals, 1024 sinusoidal waves/rev.	Self-adaptable time-out (700 ns ... 8 µs) Clock frequency max.: 10 MHz Preset and Counting direction inputs Error and warning bits Sine-Cosine additional signals, 1024 sinusoidal waves/rev.
	Protected against short-circuit and reverse polarity	

We can provide prototypes and discuss projects for OEM applications/high volumes

ASM36

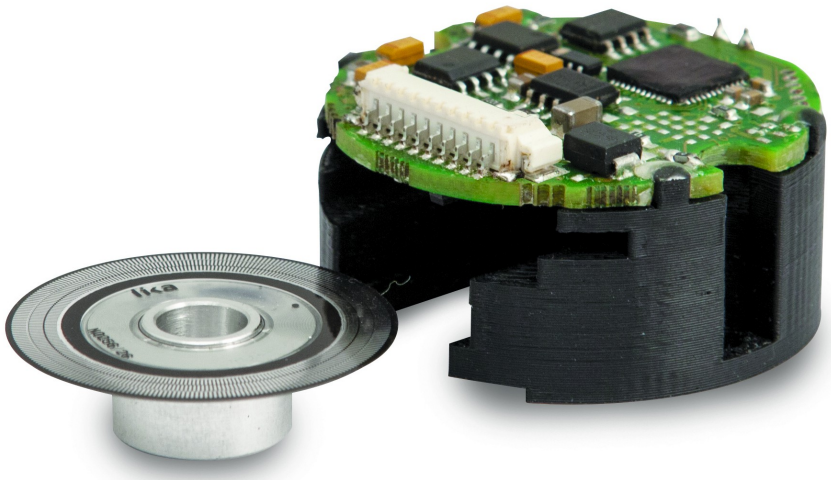

Miniature frameless encoder with optical sensing technology

For feedback of robotic systems, motors and OEM applications

SSI and BiSS C-mode interfaces

Singleturn resolution up to 21 bits (2,097,152 cpr)

Sine-Cosine additional track

Simple installation procedure, via tool and software

ASM36

- For AC servo motors and brushless motors typ. size 40 to 80 with Ø 6 mm / 0.236" rear shaft and 20 mm / 0.787" centring diameter flange
- direct integration into motors and OEM applications
- Ø 35 mm / 1.378"
- frameless and bearingless design
- unaffected by wear, friction, fatigue and mechanical stresses
- operating temperature -40°C +100°C / -40°F +212°F
- mounting tool and calibration software (see kit **IF90-SC**, delivered pre-calibrated)

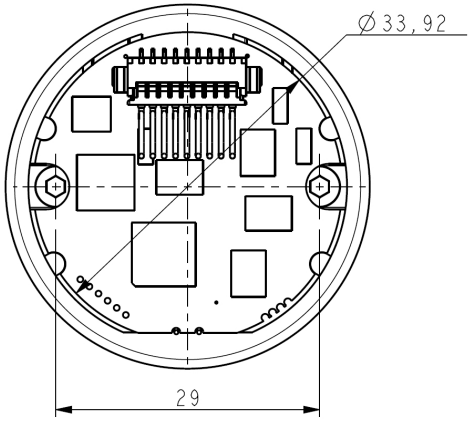

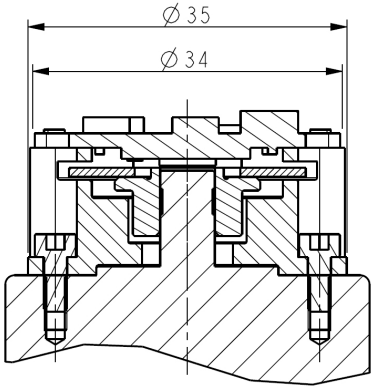

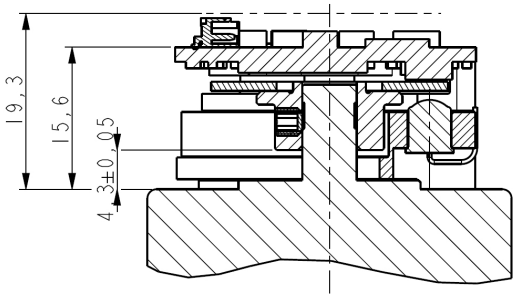

ASM36

- Calibration software **SW IF90-SC_vx.x.exe**
- connection via hardware interface **IF90-SC**, USB cable and **EXC-D15M-S71-TF12-1,0-X10-LK** cable (Molex 10-pin connector – Dsub 15-pin connector)

EXC-D15M-S71-TF12-1,0-X10-LK cable and PF5009 mechanical spacer to be ordered separately.

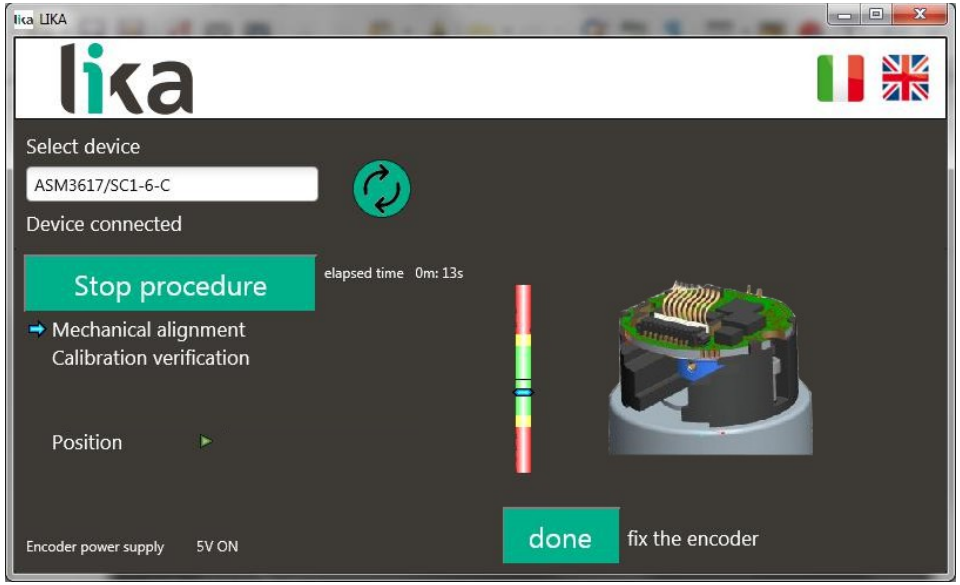

ASM36

	ASM36xx/BG1-..., BG2-..., GG1-..., GG2-...	ASM36xx/SC1-..., SC2-...
Interface	SSI interface MSB Aligned protocol Binary or Gray code	BiSS C-mode interface
Resolution	ASM3616/... = 65,536 cpr ... ASM3621/... = 2,097,152 cpr	
Output	10 pin PCB connector (mating connector + cordset on demand)	
Power supply	+5Vdc ±5%, +10Vdc +30Vdc	
Further features	Tp pause time: 16 µs Clock frequency max.: 4 MHz Sine-Cosine additional signals, 256 sinusoidal waves/rev.	Time-out: it can be set (1 ... 16 µs) Clock frequency max.: 10 MHz Error and warning bits Sine-Cosine additional signals, 256 sinusoidal waves/rev.
	Protected against short-circuit and reverse polarity	

We can provide prototypes and discuss projects for OEM applications/high volumes

SMAB + MRAB

SMAB is the rugged bearingless absolute encoder with large through bore and flat ring

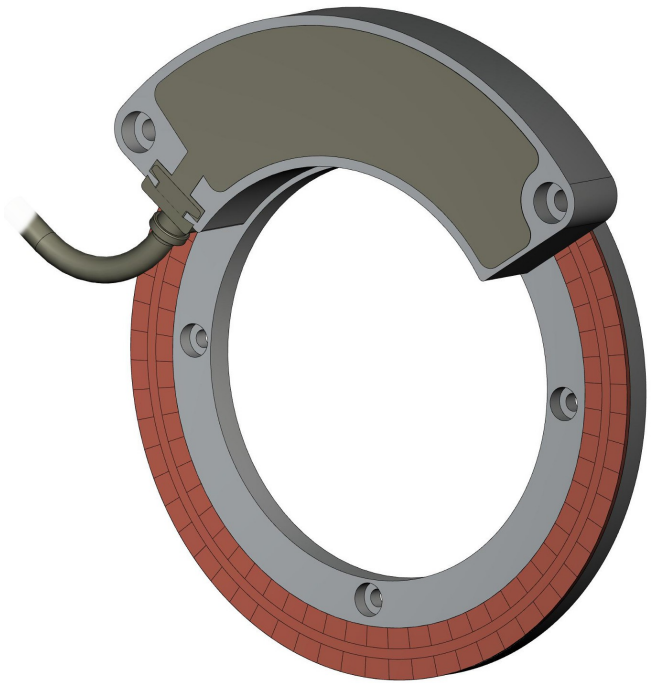

Shaftless design, contactless and wear-free magnetic scanning

80 mm / 3.149" thru-bore, 6 mm / 0.236" thick ring

For feedback of robotic systems, radars and antennas, military installations, surveillance systems and motors

16 bit resolution (65,536 cpr), SSI interface

SMAB + MRAB

- SMAB sensor head + MRAB flat ring
- unconventional installation, poles are oriented axially, the low profile sensor head is mounted over the flat surface of the ring instead of radially as usually
- 80 mm / 3.149" thru-bore, 6 mm / 0.236" thick ring
- speed up to 6,000 rpm
- fully overmoulded electronics
- up to IP69K protection rate
- resistant to dust, liquids, shocks and vibrations
- immunity to contaminants and interference, durability under adverse conditions and wash down processes
- operating temperature -25°C +85°C / -13°F +185°F
- cable output, M12 connector output

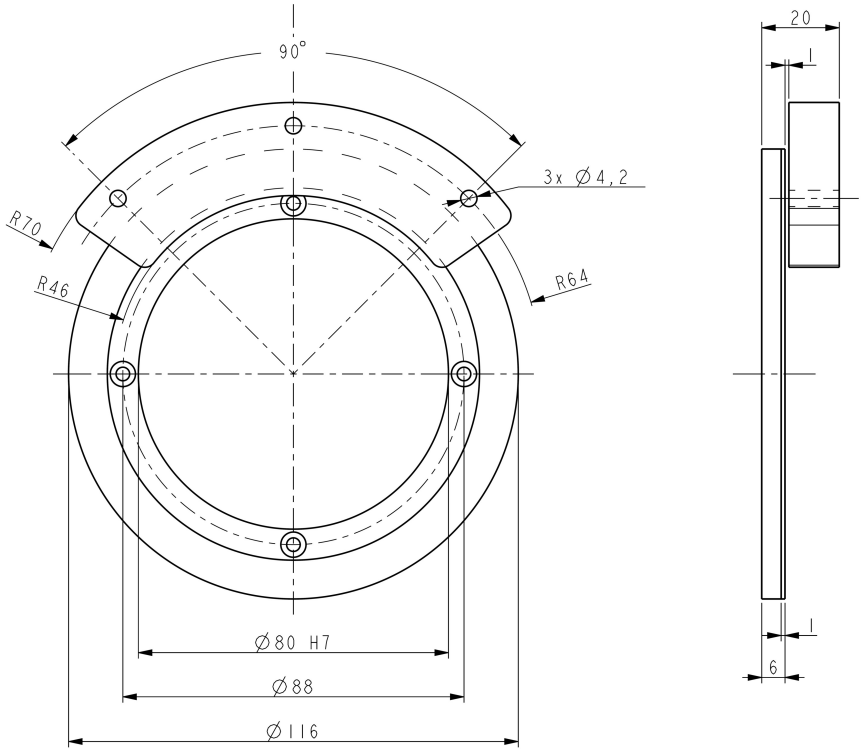

SMAB + MRAB

	SMAG-BG-..., SMAG-GG-...
Interface	SSI interface MSB Aligned protocol Binary and Gray code
Resolution	SMAG-xx-2-16... = 16 bits (65,536 cpr) Other resolutions on request (SMAG-xx-2-18... = 18 bits = 262,144 cpr)
Output	Cable output, M12 connector output
Power supply	+10Vdc +30Vdc
Further features	Tp pause time: 12 µs Clock frequency max.: 2 MHz Zero setting and Counting direction inputs Error and warning bits Diagnostic LEDs Protected against short-circuit and reverse polarity

ASC85

ASC85 is the thru-bore encoder with high 25 bit singleturn resolution and high ±0.005° accuracy

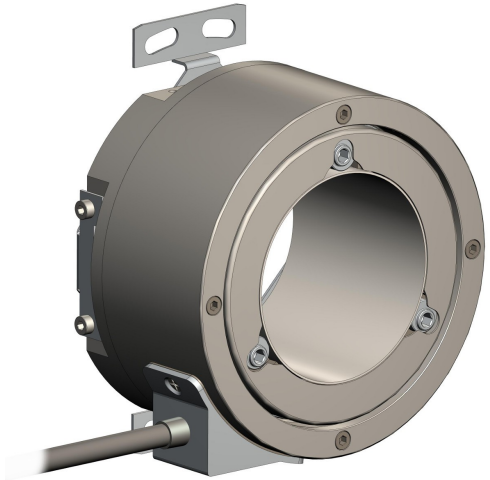

Rotary encoder with optical sensing technology

50 mm / 1.968" through hollow shaft

For feedback of robotic systems, radars and antennas, military installations and motors

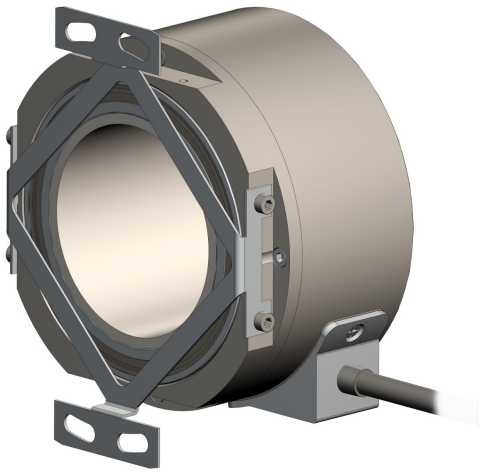

SSI and BiSS C-mode interfaces

High singleturn resolution up to 25 bits (33,554,432 cpr)

lika®
Smart encoders & actuators

ASC85

- Stainless steel rugged construction
- 50 mm / 1.968" through hollow shaft
- space-saving clamping system by fixing plate and three eccentric screws
- IP65 protection rate
- operating temperature -40°C +100°C / -40°F +212°F
- cable output, M12 and M23 connector output
- high accuracy ±0.005°

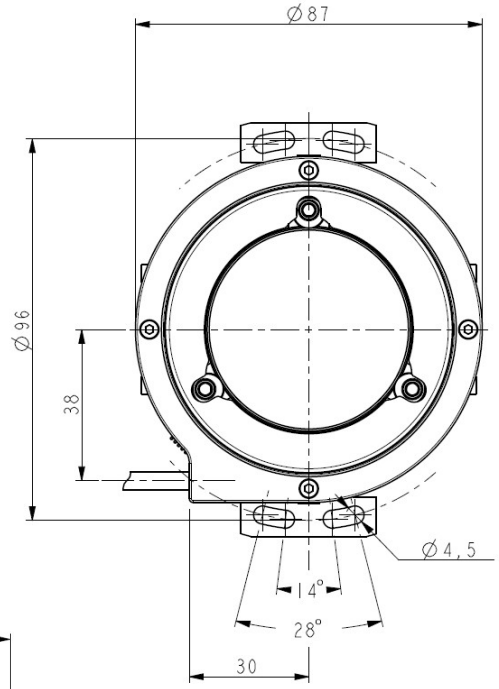

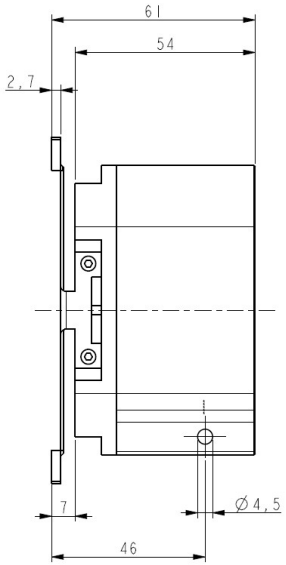

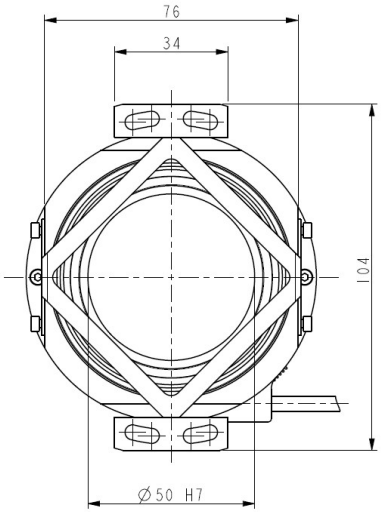

lika®
Smart encoders & actuators

ASC85

	ASC85xxBG1-..., BG2-..., GG1-..., GG2-...	ASC85xxSC1-..., SC2-...
Interface	SSI interface MSB Aligned protocol Binary or Gray code	BiSS C-mode interface
Resolution	ASC8520... = 20 bits (1,048,576 cpr) ... ASC8525... = 25 bits (33,554,432 cpr)	
Output	Cable output, M12 and M23 connector output	
Power supply	+5Vdc ±5%, +10Vdc +30Vdc	
Further features	Tp pause time: 12 µs Clock frequency max.: 2 MHz Zero setting and Counting direction inputs	Self-adaptable time-out (700 ns ... 8 µs) Clock frequency max.: 10 MHz Preset and Counting direction inputs Error and warning bits
	Protected against short-circuit and reverse polarity	

If you need more information please contact us on +39 0445806600 or email our Sales Team

lika®
Smart encoders & actuators

Lika Electronic
Via S. Lorenzo, 25 • 36010 Carrè (VI) • Italy

Tel. +39 0445 806600
Fax +39 0445 806699

info@lika.biz • www.lika.biz